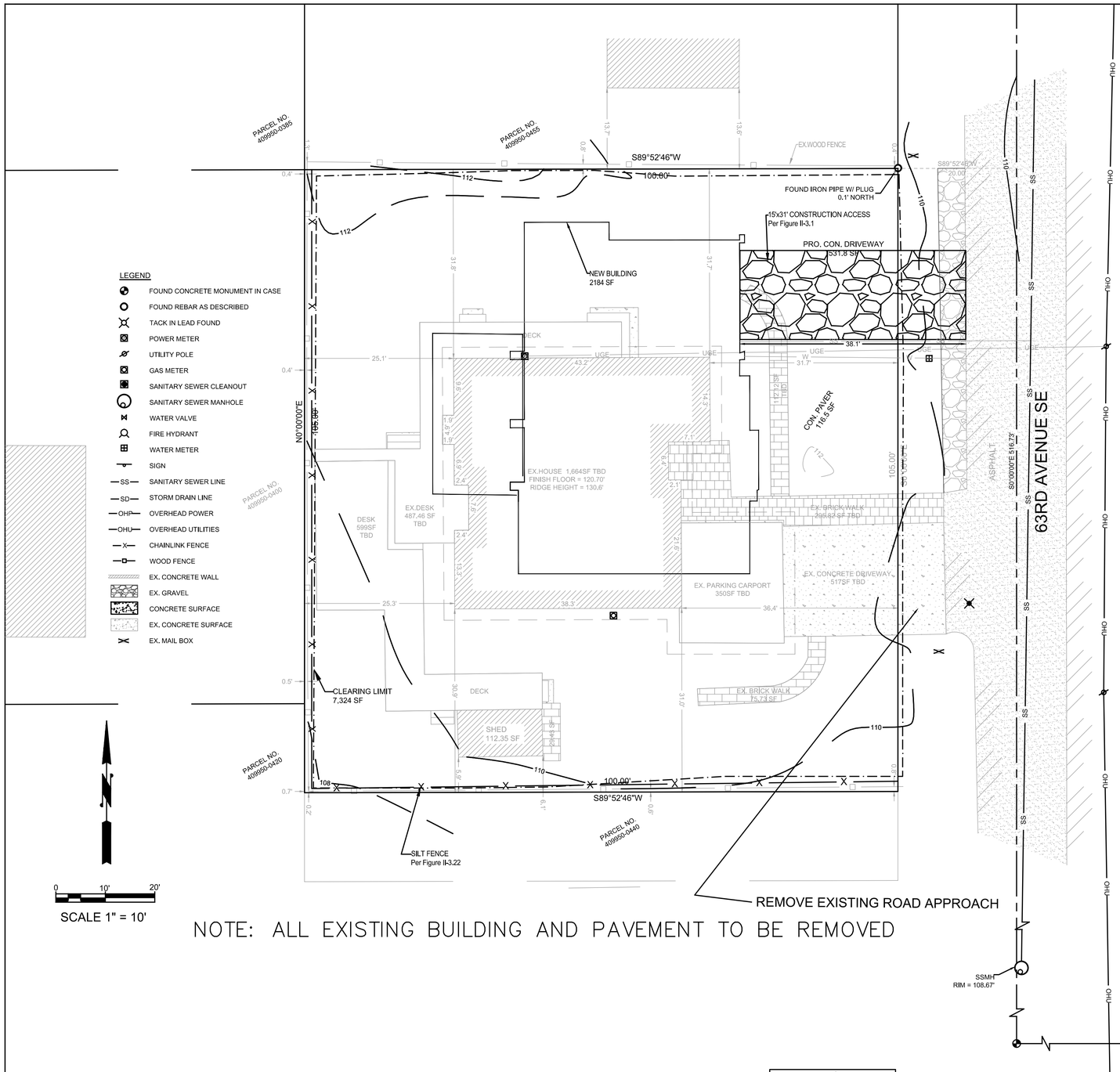

NOTE: ALL EXISTING BUILDING AND PAVEMENT TO BE REMOVED

Figure II-3.1: Stabilized Construction Access

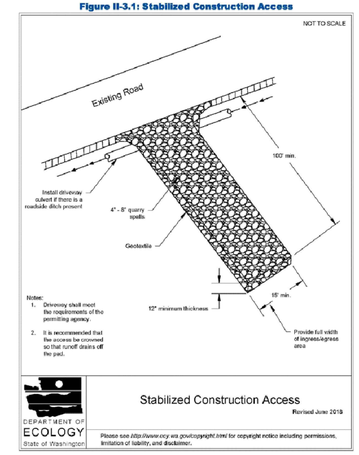

2019 Stormwater Management Manual for Western Washington

Volume II - Chapter 3 - Page 279

Figure II-3.22: Silt Fence

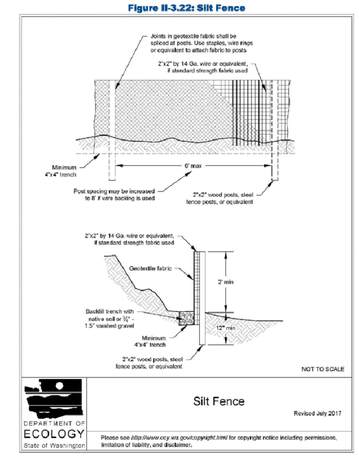

2019 Stormwater Management Manual for Western Washington

Volume II - Chapter 3 - Page 371

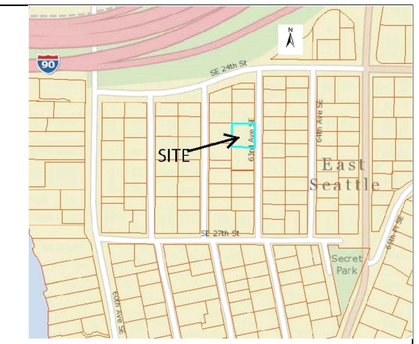

VICINITY MAP

PARCEL # 409950-0430

LEGAL: LAKE VIEW PLACE EAST SEATTLE N 1/2 OF LOT 14 ALL OF LOTS 15 THRU 17
PLat Block: 4
Plat Lot: 14-17

1ST LEVEL:	2,120 SF
2ND LEVEL:	2,070 SF
TOTAL	4,190 SF
GROSS FLOOR AREA:	4,190 SF

LOPE LESS THAN 15% ALLOWABLE: 40%
LOT SIZE: 10,500 SF
ALLOWABLE IMPERVIOUS AREA: 4,200 SF

BASE HEIGHT 30'

TOTAL LOT AREA	10,500 SF
PRO. BUILDING FOOTPRINT INCLUDING GARAGE	2,184 SF
PRO. CONCRETE DRIVEWAY	531.8 SF
PRO. WALKWAY/PAVER	116.5 SF
TOTAL PROPOSED IMPERVIOUS	2,832.3 SF

TOTAL% PROPOSED IMPERVIOUS COVERAGE = 27%

TOTAL NEW AND REPLACED IMPERVIOUS AREAS = 2,944.65 SF OR 28%

TOTAL LOT AREA	10,500 SF
EX. FOOTING BUILDING TBD	1,664 SF
EX. PARKING CARPORT TBD	360 SF
EX. CONCRETE DRIVEWAY TBD	517 SF
EX. CONCRETE TBD	28.33 SF
EX. SHED REMAINED	112.35 SF
TOTAL EX. IMPERVIOUS	2,681.68 SF

TOTAL% EX. IMPERVIOUS COVERAGE = 25.5 %

TOTAL EX. IMPERVIOUS REPLACEMENT = 2,569.33 OR 24.5% COVERAGE

EX. DESKS TBD	1,086.46 SF
EX. BRICKS TBD	407.94 SF
EX. BRICKS REMAINED	105.16 SF

NOTE: SITE PLAN PROVIDED BY ATLAS ARCHITECT AND TOPO PROVIDED BY THOMAS- SITE SURVEYING, INC.

NOTE: THE UTILITY LOCATIONS MUST BE LOCATED BY THE CONTRACTOR BEFORE DIGGING. THE ENGINEER HAS NO RESPONSIBILITY FOR ANY UTILITIES HEREON GRAFTED ON THIS PLAN. CALL 811 BEFORE DIGGING.

NO	DATE	BY	APPR	REVISIONS

ANSTEY ENGINEERING
8627 NE 180th Street
Bothell, WA 98011
Ph: 206-303-7639
Email: benanstey@ansteyengineering.com

BENJAMIN P. ANSTEY STATE OF WASHINGTON 20614 REGISTERED PROFESSIONAL ENGINEER
8/5/2022

Approved By

BPA 12/17/19
DESIGNED BY DATE
BPA 12/17/19
DRAWN BY DATE
CHECKED BY DATE

MINGQIN LI & SUN YONG
2423 63RD AVE SE
MERCER ISLAND, WA 98040

TESC PLAN

AE2019-84

SHT 1 OF 1